FeMODBUS – Windows software for MODBUS TCP / RTU communication

Frandos Engineering LLC
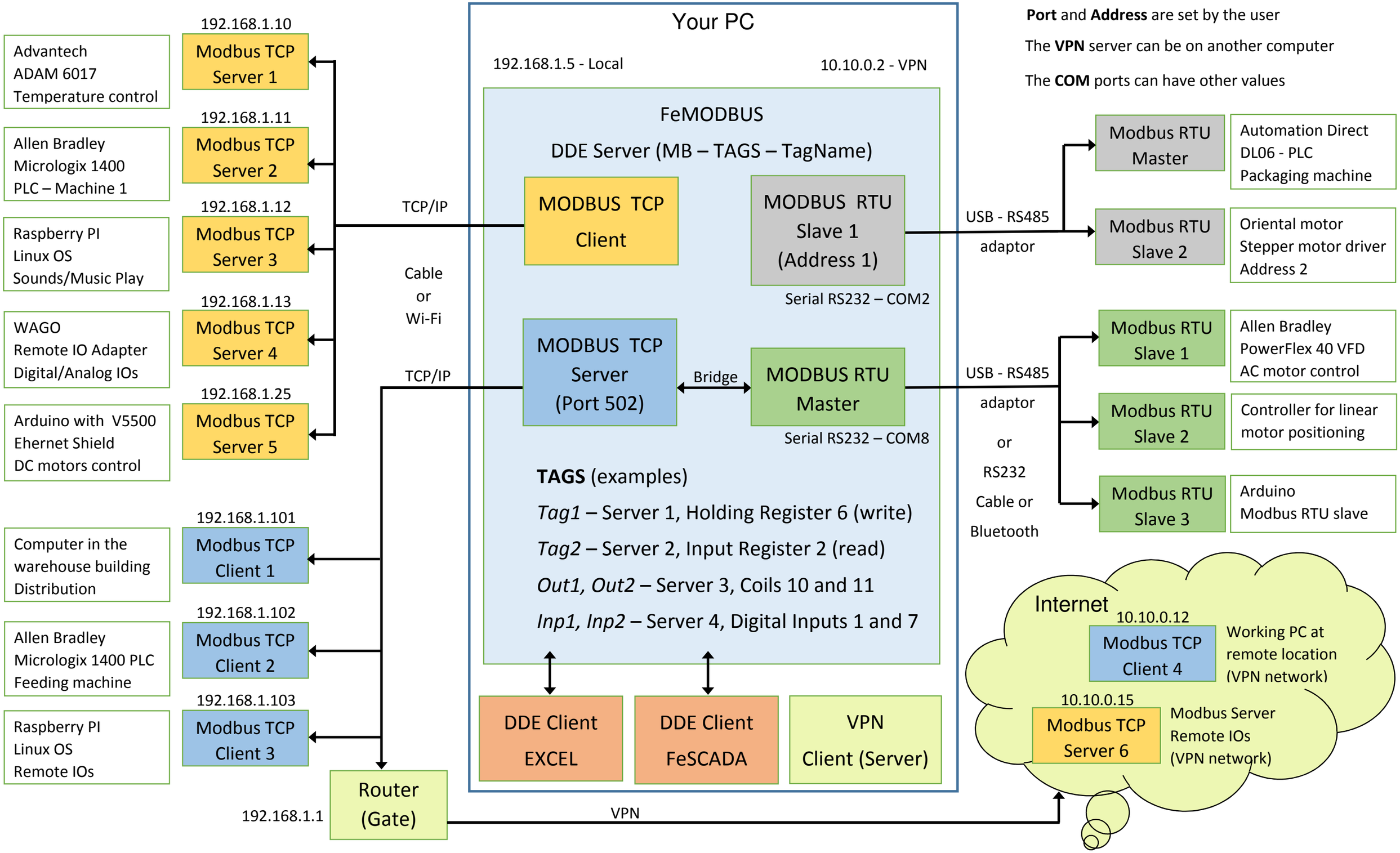
www.frandosengineering.com